Creating safety.
With passion.

NewTec

NT SECURE DEVICE

NTSecureGateway: Easy connectivity for legacy production environments

Our NTSecureGateway devices enable secure transfer of data and applications from production sites to the cloud and vice versa. They are used to create secure industrial IoT applications connecting your legacy machinery via CAN bus or BLE. By data scaling, buffering and filtering they allow for real-time edge computing. The NTSecureGateway is extensible trough various wireless standards such as LTE NB IoT, Lora, LTE, and BLE as well as Ethernet.

- Developer-friendly extensibility & adaptability
- Scalable, real-time edge processing
- Flexible deployment on any cloud or data center
- Intrinsic security features
- Performance and scalability

NTSecureGateway

Our NTSecureGateway is a full-stack wireless networking solution that enables users to set up a dedicated, secure industrial IoT solution. The flexible and ready-to-use system architecture allows for machine control and easy connectivity in legacy production environments and in facility management scenarios.

Typical Applications

- Legacy Industrial Applications
- Facility Management

Customer Benefit

- Accelerate time to market
- Reduction in costs for development and certification
- Ready-to-use communication interfaces
- Highly secure

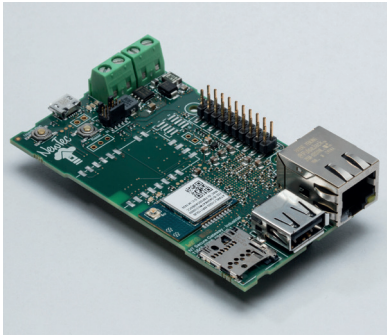

NewTec GmbH Buchenweg 3 89284 Pfaffenhofen a.d. Roth Tel.: + 49 7302 9611-0 info@newtec.de www.newtec.de

NTSecureGateway
System Overview

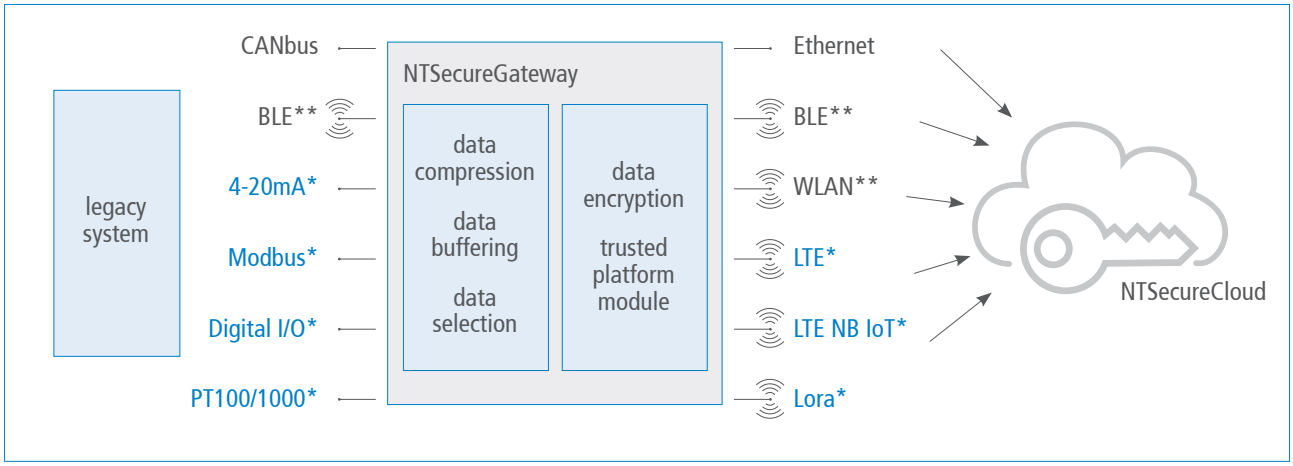

* Expansion module ** Assembly option

Key Features

- Microchip ATSAMA5D27 incl. 128 MB RAM
  - ARM Cortex-A5 core
  - Up to 500 MHz
  - 256 MB NOR Flash
  - Extensible through Micro SD Card
- Secure data transfer
- End-to-end encryption
- Edge computing platform
- Parametrization via mobile app / internet
- Data compression, buffering and selection
- Extensible through individual application programming
- Configurable transmission parameters
- Interfaces: Ethernet and USB 2.0 Host Interface
- Supported protocols: OPC/UA, MQTT, PROFINET

Security and Encryption

- Dedicated cryptographic hardware engine (ARM TrustZone)
- Cryptography and security middleware services
- Security Library NTSecureCloudConnector
- Device Life-Cycle-State management
- Key Management infrastructure
- Secure Boot
- Various supported encryption algorithms, such as AES, RSA, Diffie-Hellman, Elliptic Curve ECC, etc.
- Tamper Protection
- ATECC608 Secure Keystore
- ARM Trust Zone

General Specification

- Power consumption: 1,5 W @ 24 V_{DC}
- Power supply 7-32 V_{DC}
- Over Voltage Protection: +/- 35 V_{DC}
- Isolation Protection: 2.000 V_{DC}
- Power Reversal Protection

Environmental Parameters

- Operating Temperature: from -25°C to +70°C
- Storage Temperature: from -40°C to 85°C
- Operating Humidity: from 20% to 95% RH (non-condensing)
- Storage Humidity: from 0% to 95% RH (non-condensing)
- 49,7 x 86,4 mm (54 mm DIN Rail housing)

NewTec GmbH Buchenweg 3 89284 Pfaffenhofen a.d. Roth Tel.: + 49 7302 9611-0 info@newtec.de www.newtec.de

F868_0219